MyDesign Portfolio

Element D

Element D: Design Concept Generation, Analysis, and Selection

Design idea #1 - Connectable Flat Panel

Date: 3/5/25
Description: This is our first design for the cable trough which has stubs which act like a puzzle piece that can break apart to be more portable and manageable.
Drawing that includes distinguishing information such as scale, dimensions, and materials:

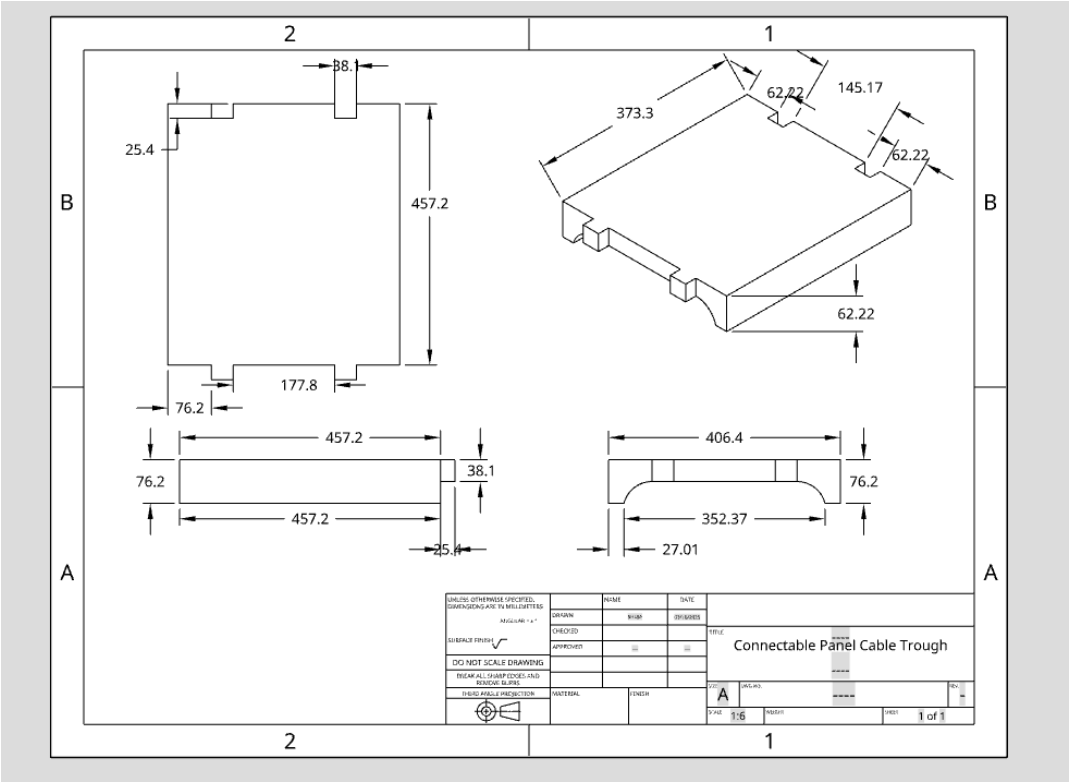

Design Idea #2 - Connectable Curve Panel

Date: 3/7/25
Description: A flatter design based on the rubber lining that also includes the “puzzle piece” like additions for storage and increased length.
Drawing that includes distinguishing information such as scale, dimensions, and materials:

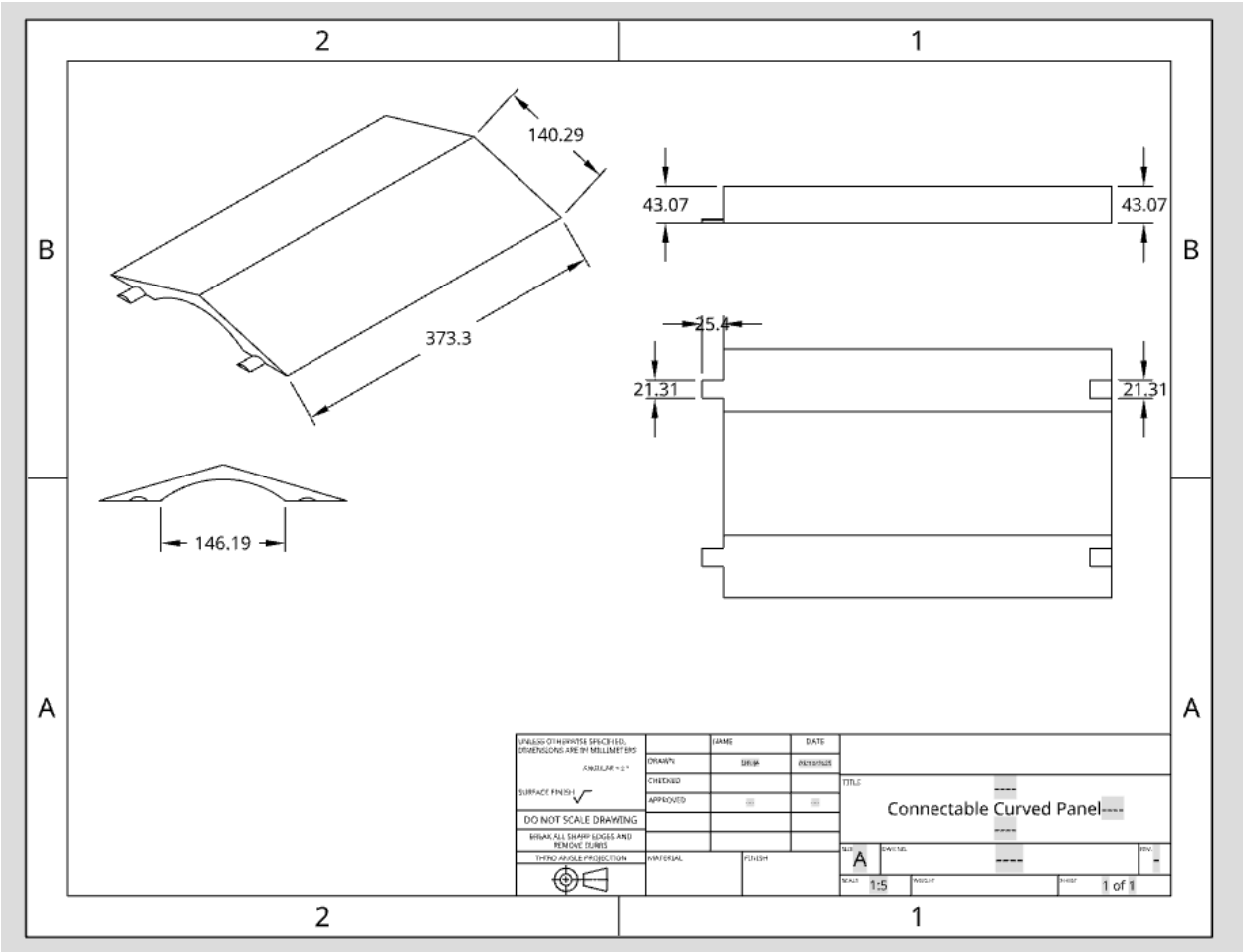

Design Idea #3 - Connectable Block Panel

Date: 3/10/2025
Description: A most “block” like shaped cable trough with a hole to pass the wires through that also continues the theme of the puzzle piece like attachments.
Drawing that includes distinguishing information such as scale, dimensions, and materials:

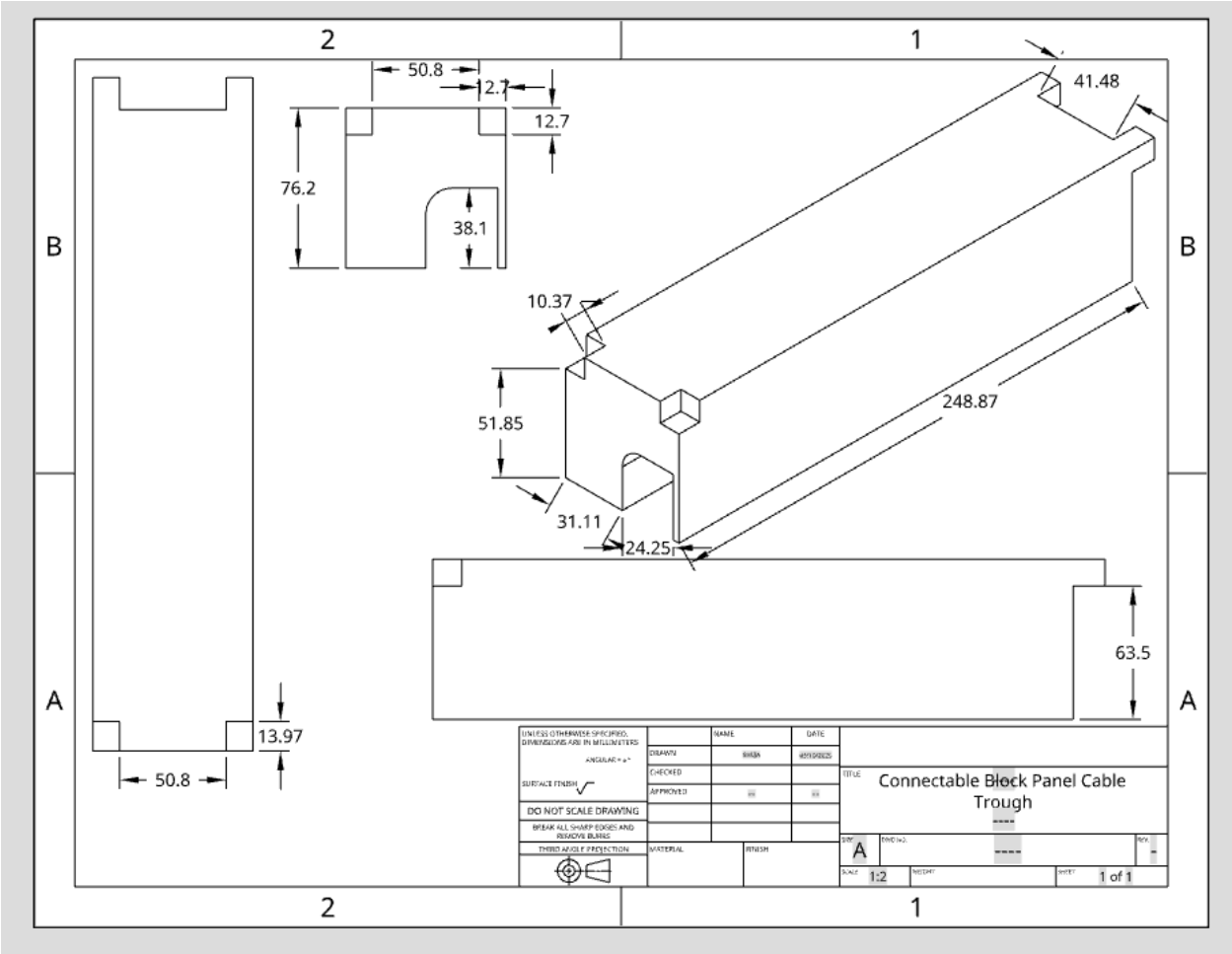

Design Idea #4 - Acrylic Panel w/ PLA Pegs

Date: 3/17/2025

Description: The acrylic cable covering is flat, transparent, and durable. The PLA pegs have rubber no slip pads attached to the bottom in order to be secured and to increase stability. The PLA pegs are super onto the acrylic panel

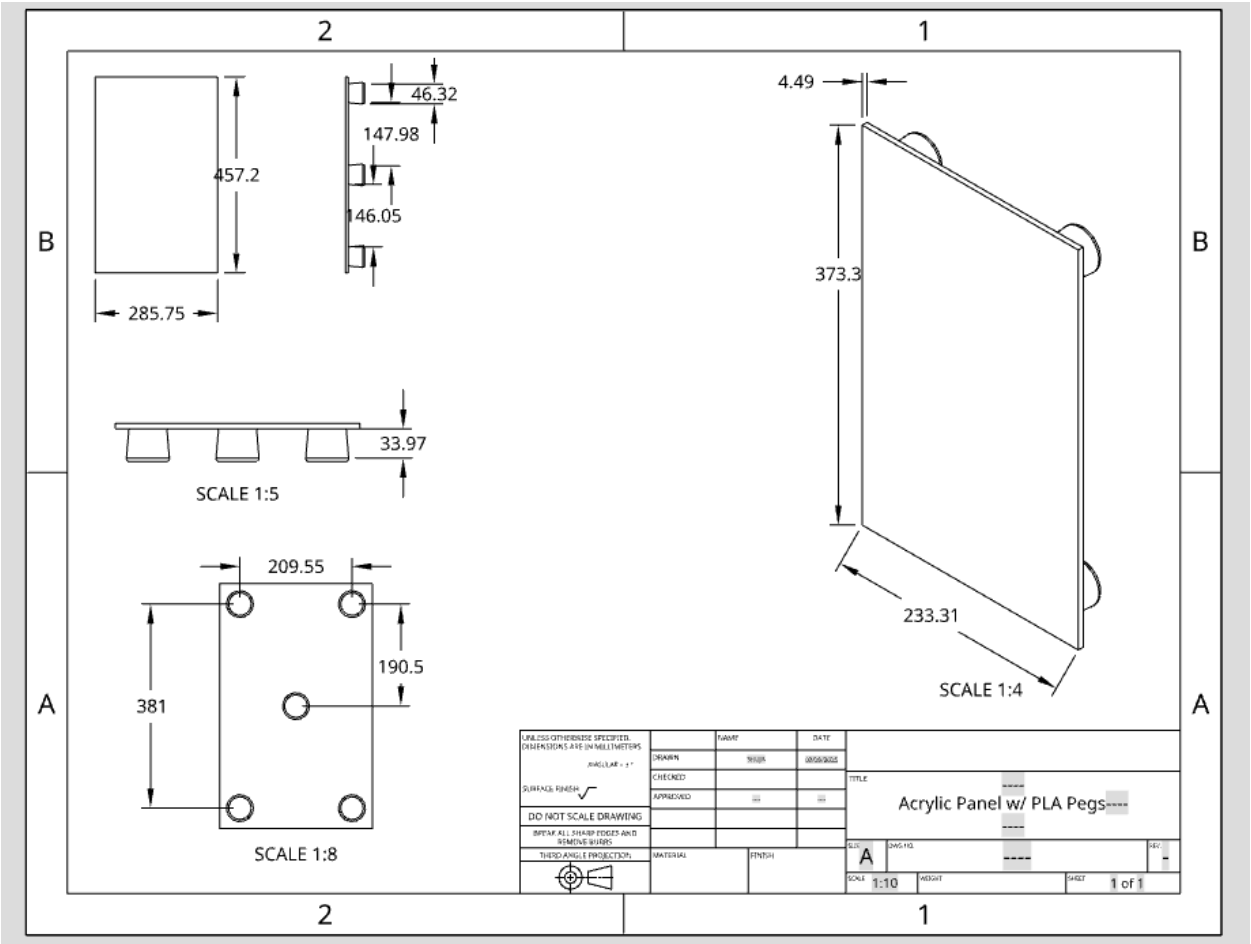

Design Decision Matrix:

	weight	Connectable Flat Panel	Connectable curved panel	Connectable block panel	Acrylic Panel w/ PLA pegs
Within Measurements (236”x18”x6”)	30%	5	5	5	5
Compression Strength	30%	4	2	5	5
Cable Coverage	20%	5	3.5	3.5	5
Weight	10%	3.5	5	3	5
Accessibility	10%	3.5	4	2	5
score		4.2	3.9	3.7	5
ranking		2	2	2	5

Ranking Score: 5 is the highest, 1 is the lowest

Design Blueprint #1

Date: 3/13/2025

Sketch:

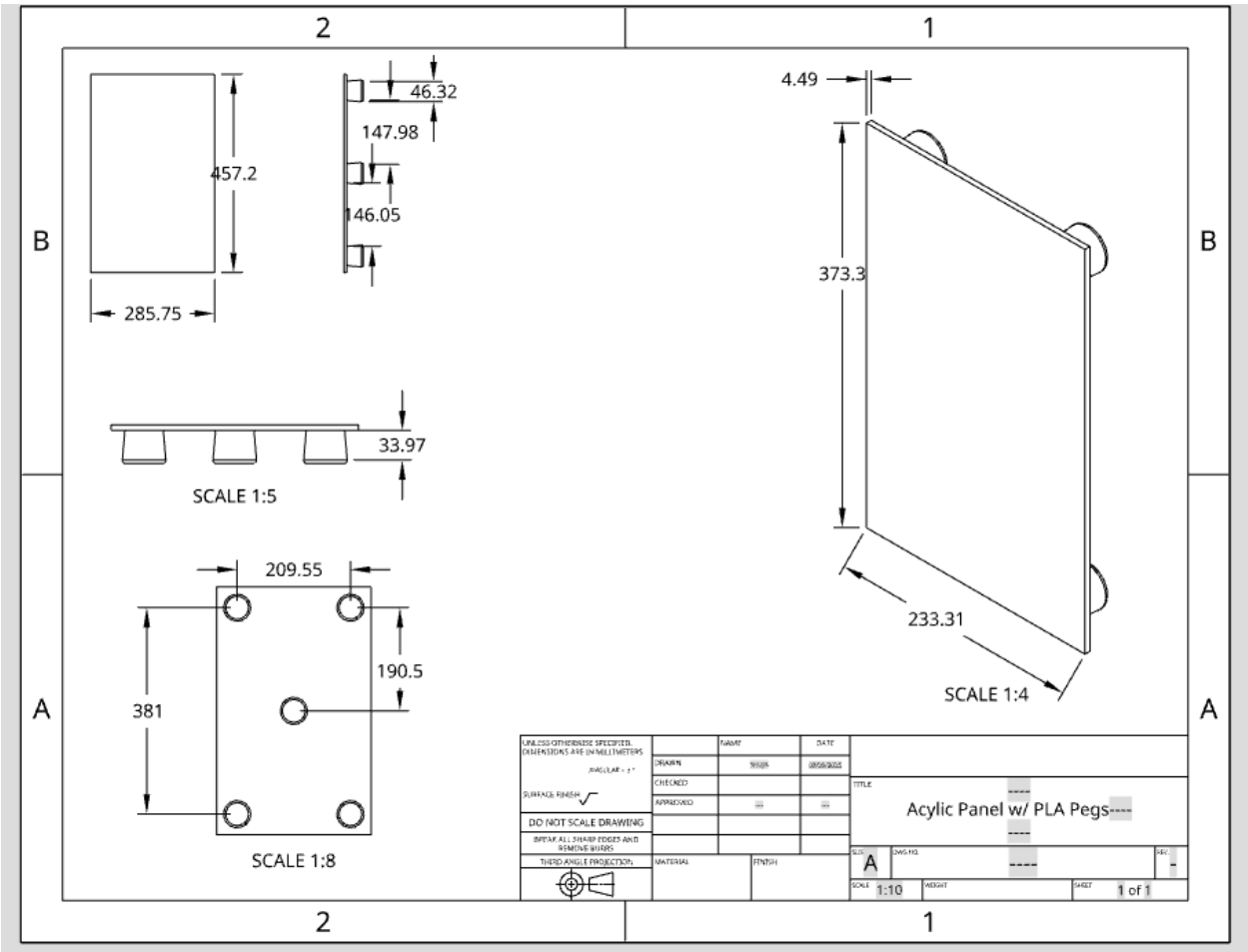

Manufacturing Methods:

Step 1: Load up the model into Onshape

Step 2: Extract the file onto a sd card
Step 3: insert the sd card into a 3d printing machine and start it

Or

Step 1: Acquire a bunch of acrylic
Step 2: cut it into parts that'll fit the measurements
Step 3: glue them together w/ superglue

Supply List and Costs: PLA Filament or acrylic

Item	**Cost each**	**# needed**	**Total**
PLA Filament	$20.00	23.32 lbs	$40.00
PlexiGlass/acrylic	$18.88	21.7 lbs	$94.40
Total Cost			$134.40